ROBOTICS 4/M

TOPIC 11: CONTROL METHODOLOGIES

11.1 INTRODUCTION

The control algorithm used in any robot manipulator system performs a specific task. This obviously depends on the particular application e.g. joint position control. However, in general the operation of all controllers is the same i.e. to regulate the operation of the robot's joint actuators. Although the control application is similar for all robot manipulators, the way that the application is handled depends on the control methodology being used.

Every control methodology has advantages as well as disadvantages. The particular method being used in any given application must be chosen so that the advantages of the controller's operation outweigh the disadvantages.

Three control methodologies and their time domain design approaches are presented in this course. They are commonly used to control actual industrial robot manipulators in practice. Other methodologies are also used, but either they are covered by other courses or they are too advanced for the scope of this course.

11.2 PID CONTROL

The fundamental control system is the *three term controller* [1] otherwise known as the *PID controller*. PID stands for **P**roportional, **I**ntegral and **D**erivative, which are three components of the controller. The proportional term provides control action that is equal to an amplified version of the error between the desired and actual controlled variable (e.g. joint position). The integral term provides an amplified component of the integrated error. Similarly, the derivative term is an amplified component of the derivative of the error [1]. These three components are added together to form the control signal that is applied to the actuator being controlled. This has the configuration shown in Figure 11.1.

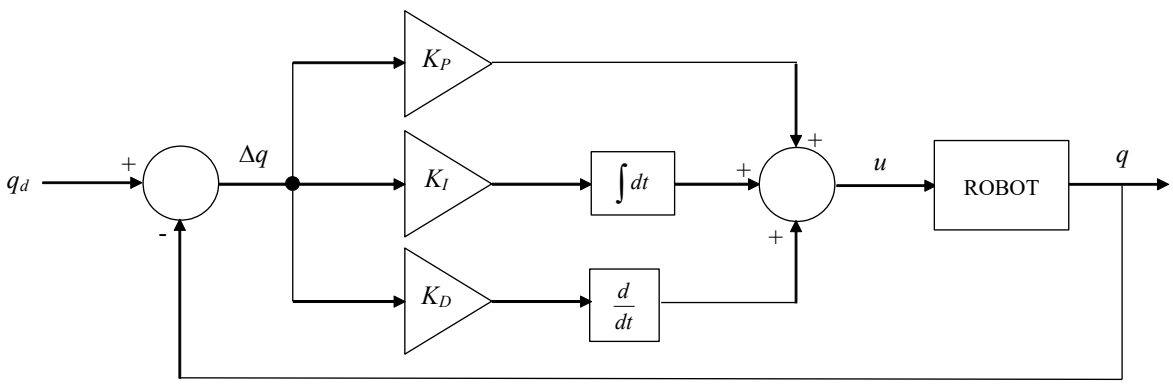

Figure 11.1: PID Controller Diagram

This controller can be represented by the following time domain equation for a single input for the system being controlled (i.e. a robot in this case):

$$u = K_P \Delta q + K_I \int \Delta q dt + K_D \frac{d\Delta q}{dt} = K_P \left(\Delta q + \frac{1}{T_I} \int \Delta q dt + T_D \frac{d\Delta q}{dt} \right) \tag{11.1}$$

Each of the components provides a specific attribute for the controller:

- The proportional term ($K_P \Delta q$) provides the main drive for the controller i.e. it provides the control action that produces the initial transient in the controlled response. The larger the K_P value, the faster the response reaches the desired state. However, if the gain K_P is too large the system becomes unstable.
- The integral term $\left(K_I \int \Delta q dt \right)$ provides the corrective control action in the steady state region i.e. after the transient has settled. It also helps to settle the transient more quickly. Unfortunately, due to the effects of the integration, the integral term can become very large and cause the system response to become unstable. To prevent this *integral anti-wind up* is used. This limits the maximum amplitude of the integrated signal to

within a reasonable size i.e. a size that will not cause a large control signal and hence cause the system to become unstable [1]

- The derivative term $\left(K_D \frac{d\Delta q}{dt}\right)$ provides rate information that can remove transient oscillation and delay the onset of instability due to large K_P values. This means that the proportional component can be made larger and consequently a quicker response. Unfortunately this term is susceptible to noise in the system and in most cases this term is neglected.

Any combination of the proportional term and the other two terms can be applied in practice.

The frequency domain transfer function for the PID controller is:

$$G_c(s) = \frac{U(s)}{\Delta Q(s)} = K_P + \frac{K_I}{s} + sK_D = K_P\left(1 + \frac{1}{sT_I} + sT_D\right) \tag{11.2}$$

DESIGNING PID GAINS: ZIEGLER-NICHOLS TUNING

The gains for the PID controller can be obtained by using Ziegler-Nichols tuning [1]. This is a process industrial accepted method for time domain tuning of this controller type. This method can be applied in two ways:

(1) Oscillation Approach

The oscillation approach follows these steps:

(a) Simulate a proportional controller and increase the K_P gain until the response of the closed loop controlled systems starts to oscillate (i.e. becomes *marginally stable*). This gives a gain value of K_C.

(b) Note the value of K_C and the period of the oscillation, T_C.

(c) The recommended gain settings for P, PI and PID controllers are thus:

P controller:	$K_P = 0.5\ K_C$
PI controller:	$K_P = 0.45\ K_C$
	$T_I = 0.833\ T_C$
PID controller:	$K_P = 0.6\ K_C$
	$T_I = 0.5\ T_C$
	$T_D = 0.125\ T_C$

(2) Open-Loop Step Approach

The open-loop step approach is particularly suited to a system that, without control, can produce an open-loop step response with measurable lag (delay) time (see Figure 11.2)

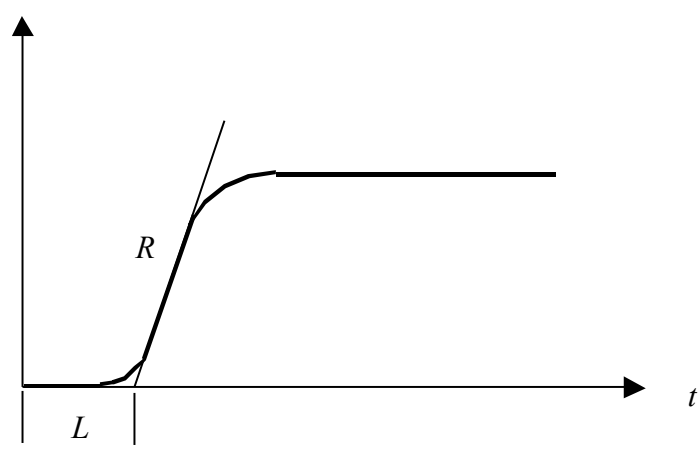

Figure 11.2: Open-Loop Step Response

The PID controller gains can be calculated based on this response and the following steps:

(a) Generate the open-loop step response.

(b) Calculate the slope of the response R and the lag time L.

(c) The recommended gain settings for P, PI and PID controllers are thus:

P controller:	$K_P = 1/(RL)$
PI controller:	$K_P = 0.9/(RL)$
	$T_I = 3.3\ L$
PID controller:	$K_P = 1.2/(RL)$
	$T_I = 2\ L$
	$T_D = 0.5\ L$

PRACTICAL PID CONTROLLERS

For practical applications of PID controllers, the idealised controller structure in Equations (11.1) and (11.2) cannot be implemented. Firstly, an ideal derivative term cannot be applied in reality. Instead the effects of the derivative can be accomplished by implementing a lead compensator with the following form:

$$sT_D \approx \frac{sT_D + 1}{\alpha s T_D + 1} \tag{11.3}$$

where α is fixed between 1/6 and 1/20 [1].

This means that the PID controller takes the form of a PI controller in cascade with a lead compensator [1]. The resulting transfer function control structure is as follows:

$$G_c(s) = \frac{U(s)}{\Delta Q(s)} = K_P \left(\frac{sT_I + 1}{sT_I} \right) \left(\frac{sT_D + 1}{\alpha s T_D + 1} \right) \tag{11.4}$$

This structure gives the same control effect as the theoretical PID controller within a practical context.

11.3 INVERSE DYNAMICS CONTROL

The Inverse Dynamics Approach is classed as a model following control system. This approach lends itself very well to the MIMO centralised control approach. However, this approach can be used applied to the single joint control approach.

This approach to controller design is based on the premise that dynamic models of systems have the input signals, $\boldsymbol{u}$, as the inputs to the system, and the dynamic variables as the outputs (see Figure 11.3(a)). With the inverse dynamics approach the controller has the dynamic variables (or their desired response) as the input to the controller, and the inverse dynamics perform the reverse process of the model and produce the required input signals to produce the desired motion (see Figure 11.3(b)).

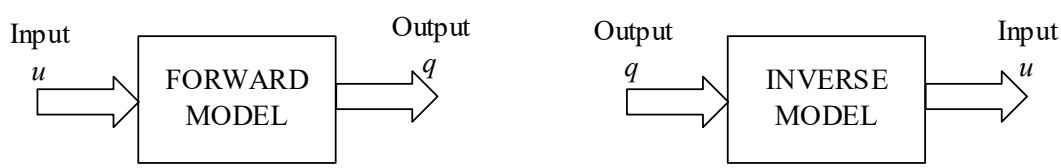

(a) Forward Model (b) Inverse Model

Figure 11.3: Model and Inverse Dynamics Illustrations

The effect of this approach is to use the dynamic inversion to cancel (or compensate for) the dynamics of the system being controlled (in this case a robot), and to impose the desired dynamic response in its place, i.e. make the system behave the way the operator wishes.

The derivation of this approach begins with the definition of the robots equations of motion (which has a similar structure to other dynamic systems) i.e.

$$\begin{aligned}\mathbf{M}(\mathbf{q})\ddot{\mathbf{q}} + \mathbf{C}(\dot{\mathbf{q}},\mathbf{q})\dot{\mathbf{q}} + \mathbf{F}_{\mathbf{v}}(\dot{\mathbf{q}})\dot{\mathbf{q}} + \mathbf{g}(\mathbf{q}) &= \mathbf{u} \\ \mathbf{M}(\mathbf{q})\ddot{\mathbf{q}} + \mathbf{N}(\dot{\mathbf{q}},\mathbf{q}) &= \mathbf{u}\end{aligned} \tag{11.5}$$

Where **u** represents the inputs to the system. In order to compensate for these dynamics the control law should take the following form:

$$\mathbf{u} = \mathbf{M}(\mathbf{q})\mathbf{y} + \mathbf{N}(\dot{\mathbf{q}},\mathbf{q}) \tag{11.6}$$

Where **y** is a control variable that estimates the second derivative of the dynamic variables **q**. This variable is found from the desire for the system to behave like a second order system i.e.

$$\mathbf{y} + \mathbf{G_D}\dot{\mathbf{q}} + \mathbf{G_P}\mathbf{q} = \mathbf{G_P}\mathbf{r} \tag{11.7}$$

Here **r** is the reference for the system to follow and $\mathbf{G_D}$ and $\mathbf{G_P}$ are diagonal gain matrices defining the second order characteristics of the system i.e.

$$\mathbf{G_D} = diag\{2\zeta_1\omega_{n1}, 2\zeta_2\omega_{n2}, \cdots, 2\zeta_n\omega_{nm}\} \qquad \mathbf{G_P} = diag\{\omega_{n1}{}^2, \omega_{n2}{}^2, \cdots, \omega_{nm}{}^2\}$$

where ω_n is the natural frequency of the response and ζ is the damping factor for each of the joints represented by the dynamic equations of motion. It follows that the desired response f the system in terms of its desired variables should also be the same second order system for the same reference signal i.e.

$$\ddot{\mathbf{q}}_\mathbf{d} + \mathbf{G_D}\dot{\mathbf{q}}_\mathbf{d} + \mathbf{G_P}\mathbf{q}_\mathbf{d} = \mathbf{G_P}\mathbf{r} \tag{11.8}$$

It follows that Equations (11.7) and (11.8) i.e.

$$\mathbf{y} + \mathbf{G_D}\dot{\mathbf{q}} + \mathbf{G_P}\mathbf{q} = \ddot{\mathbf{q}}_\mathbf{d} + \mathbf{G_D}\dot{\mathbf{q}}_\mathbf{d} + \mathbf{G_P}\mathbf{q}_\mathbf{d} \tag{11.9}$$

This provides an expression for the control variable **y** i.e.

$$\begin{aligned}\mathbf{y} &= \ddot{\mathbf{q}}_\mathbf{d} + \mathbf{G_D}(\dot{\mathbf{q}}_\mathbf{d} - \dot{\mathbf{q}}) + \mathbf{G_P}(\mathbf{q}_\mathbf{d} - \mathbf{q}) \\ &= \ddot{\mathbf{q}}_\mathbf{d} + \mathbf{G_D}\Delta\dot{\mathbf{q}} + \mathbf{G_P}\Delta\mathbf{q}\end{aligned} \tag{11.10}$$

The total controller expression can be formed by combining Equations (11.6) and (11.10) i.e.

$$\mathbf{u} = \mathbf{M}(\mathbf{q})(\ddot{\mathbf{q}}_\mathbf{d} + \mathbf{G_D}\Delta\dot{\mathbf{q}} + \mathbf{G_P}\Delta\mathbf{q}) + \mathbf{N}(\dot{\mathbf{q}},\mathbf{q}) \tag{11.11}$$

This equation shows that the inverse dynamics controller can be used to control all the inputs for the system as long as their dynamics are and can be modelled. The controller structure can be represented diagrammatically in the way shown in Figure 11.4 [2]:

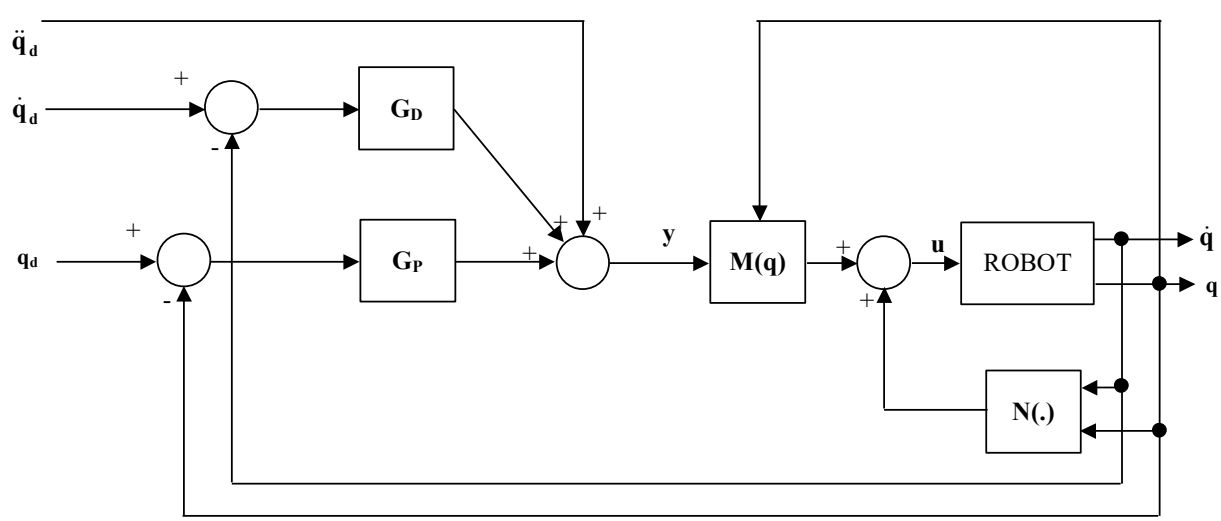

Figure 11.4: Inverse Dynamics Control System Schematic

The reference model section is also presented. This takes a desired reference variable vector and transforms it to the desired joint variables **q** [2].

DRAWBACK WITH THE INVERSE DYNAMICS CONTROL APPROACH

This approach has on major drawback: It relies on an accurate model of the equations of motion being derived for the robot being controlled. Due to slight variations in the robot and its construction, this representation may be full of inaccuracies. These inaccuracies can cause the performance of the control system to become degraded and possibly cause the system to become unstable.

11.4 SLIDING MODE CONTROL

Both the PID and inverse dynamics controllers have limitations in that they depend on a very accurate model of the robot being controlled. If the model deviates too much from the actual robot dynamics the controller will not perform correctly. However, there are some robust control systems [1-3] that are able to provide additional control effort to counteract the effects of the unmodelled dynamics that are inherent in the variations between robot and model. On of the most successful types of robust controller is based on the Sliding Mode Control methodology [3].

Sliding Mode Control is based on a two part control scheme. These parts are *the equivalent controller* (u_{eq}) and *the switching controller* (u_{sw}). This gives the following control structure for a single input:

$$u = u_{eq} + u_{sw} \tag{11.12}$$

These components are described below:

- *Equivalent Controller* is a nominal linear controller (such as PID) which provides a limited range of control effectiveness (due to drawbacks).
- *Switching Controller* is a nonlinear term which provides additional switching action when the controller needs more control effort to perform the desired control task. This nonlinear switching provides the robustness characteristics of this type of control system.

The derivation of a decoupled Sliding Mode control method is based on the equations of motion model derived in Equation (11.5) i.e.

$$\mathbf{M}(\mathbf{q})\ddot{\mathbf{q}} + \mathbf{N}(\dot{\mathbf{q}},\mathbf{q}) = \mathbf{u} \tag{11.5}$$

This equation is nonlinear since all the matrices depend on robot variables and it represents a number of input/output relationships [3]. Therefore, for a decoupled Sliding Mode controller the dynamic relationship is linearised and the main dynamics for each input are decoupled (separated) from the rest of the dynamics [1,3]. This gives the following linear relationship:

$$\mathbf{M}\ddot{\ } \quad \dot{} \quad = u \tag{11.13}$$

This relationship can be rearranged into the following matrix equation:

$$\begin{bmatrix} \ddot{\mathbf{q}} \\ \dot{\mathbf{q}} \end{bmatrix} = \begin{bmatrix} -\mathbf{M}^{-1}\mathbf{N}_1 & -\mathbf{M}^{-1}\mathbf{N}_2 \\ \mathbf{I} & \mathbf{0} \end{bmatrix} \begin{bmatrix} \dot{\mathbf{q}} \\ \mathbf{q} \end{bmatrix} + \begin{bmatrix} \mathbf{M}^{-1} \\ \mathbf{0} \end{bmatrix} u \tag{11.14}$$

This equation can be written as a standard *state space* equation:

$$\dot{\mathbf{x}} = \mathbf{A}\mathbf{x} + \mathbf{b}u \tag{11.15}$$

The separate controller components for a decoupled Sliding Mode Controller will be dealt with individually.

EQUIVALENT CONTROLLER

The equivalent controller can be derived using any other type of linear controller. In this case the equivalent controller is taken to be a state feedback controller of the following form:

$$u_{eq} = -\mathbf{k}^{\mathbf{T}}\mathbf{x} \tag{11.16}$$

This simple form of controller provides the nominal control effort for the controller. This is based on robust pole placement theory [1,3].

SWITCHING CONTROLLER

The switching controller is based on a hyperspace trajectory that determines the switching action of the controller. This trajectory is called the *sliding surface* and it provides the dynamic representation of how the controller will make the tracking error converge to zero (i.e. make the actual response, $\mathbf{x}$, of the system follow the desired response, $\mathbf{x}_d$). In this case the sliding surface is chosen to be:

$$\sigma = \mathbf{h}^{\mathbf{T}}\Delta\mathbf{x} = \mathbf{h}^{\mathbf{T}}\left(\mathbf{x} - \mathbf{x}_{\mathbf{d}}\right) \tag{11.17}$$

Here **h** is a gain matrix that will be defined later. When this equation is differentiated with respect to time we get:

$$\dot{\sigma} = \mathbf{h}^{\mathbf{T}}\Delta\dot{\mathbf{x}} = \mathbf{h}^{\mathbf{T}}\left(\dot{\mathbf{x}} - \dot{\mathbf{x}}_{\mathbf{d}}\right) \tag{11.18}$$

Substituting Equation (11.15) yields:

$$\dot{\sigma} = \mathbf{h}^{\mathbf{T}}\Delta\dot{\mathbf{x}} = \mathbf{h}^{\mathbf{T}}\left(\mathbf{A}\mathbf{x} + \mathbf{b}u - \dot{\mathbf{x}}_{\mathbf{d}}\right) \tag{11.19}$$

Substituting Equations (11.12) and (11.16) gives

$$\dot{\sigma} = \mathbf{h}^{\mathbf{T}}\left(\mathbf{A}\mathbf{x} + \mathbf{b}\left(-\mathbf{k}^{\mathbf{T}}\mathbf{x} + u_{sw}\right) - \dot{\mathbf{x}}_{\mathbf{d}}\right) = \mathbf{h}^{\mathbf{T}}\left(\left(\mathbf{A} - \mathbf{b}\mathbf{k}^{\mathbf{T}}\right)\mathbf{x} + \mathbf{b}u_{sw} - \dot{\mathbf{x}}_{\mathbf{d}}\right) \tag{11.20}$$

The term inside the brackets that are multiplied by the vector **x** is the closed loop system $\mathbf{A_c}$. This makes (11.20) become:

$$\dot{\sigma} = \mathbf{h}^{\mathbf{T}}\mathbf{A}_C\mathbf{x} + \mathbf{h}^{\mathbf{T}}\mathbf{b}u_{sw} - \mathbf{h}^{\mathbf{T}}\dot{\mathbf{x}}_{\mathbf{d}} \tag{11.21}$$

To simplify this expression, **h** is chosen as the right eigenvector for $\mathbf{A}_C$ so that their product equals zero. Therefore the equation becomes:

$$\dot{\sigma} = \mathbf{h}^{\mathbf{T}}\mathbf{b}u_{sw} - \mathbf{h}^{\mathbf{T}}\dot{\mathbf{x}}_{\mathbf{d}} \tag{11.22}$$

Rearranging gives

$$u_{sw} = \frac{1}{\left(\mathbf{h}^{\mathbf{T}}\mathbf{b}\right)}\left(\mathbf{h}^{\mathbf{T}}\dot{\mathbf{x}}_{\mathbf{d}} + \dot{\sigma}\right) \tag{11.23}$$

In order to ensure that the switching controller forces the sliding surface to track to a zero value, the derivative of the sliding surface must act in opposition to the sign of the sliding surface. This gives the following equation with the appropriate switching term:

$$u_{sw} = \frac{1}{\left(\mathbf{h}^{\mathbf{T}}\mathbf{b}\right)}\left(\mathbf{h}^{\mathbf{T}}\dot{\mathbf{x}}_{\mathbf{d}} - \eta\,\mathrm{sgn}(\sigma)\right) \tag{11.24}$$

Where η is called *the switching gain* and signifies the amount of switching control effort that this term can provide and the sgn function determines the sign of the sliding surface. This value must be sufficiently large to compensate for unmodelled dynamics within the model representation used to design the controller [3].

SLIDING MODE CONTROLLER

By combining Equations (11.16) and (11.24) we get the total expression for the decoupled Sliding Mode Controller [3] i.e.

$$u = -\mathbf{k}^{\mathbf{T}}\mathbf{x} + \frac{1}{\left(\mathbf{h}^{\mathbf{T}}\mathbf{b}\right)}\left(\mathbf{h}^{\mathbf{T}}\dot{\mathbf{x}}_{\mathbf{d}} - \eta\,\mathrm{sgn}(\sigma)\right) \tag{11.25}$$

DRAWBACK WITH SLIDING MODE CONTROL

Although the Sliding Mode Controller provides additional control effort to overcome variations in the model representation used to design the controller, it does have a serious drawback. The sgn function in the switching term has two states i.e. positive or negative. When the control action approaches the zero sliding surface (i.e. when the tracking error becomes zero) the switching term begins to oscillate between positive and negative. This causes high frequency oscillation in the control signal being applied to the actuator. This high frequency phenomenon is called *chattering* and it is unwanted in this control algorithm. This is overcome by introducing a gradual transition to zero as the sliding surface tends to zero. This is called *soft switching* [3].

REFERENCES

[1] Dutton, K., Thompson, S. & Barraclough, B., *The Art of Control Engineering*, Addison-Wesley, 1998.

[2] Sciavicco, L. & Siciliano, B., *Modelling and Control of Robot Manipulators*, Springer, 2001.

[3] McGookin, E.W., Murray-Smith, D.J., Li, Y. & Fossen, T.I., *The optimisation of a tanker autopilot control system using genetic algorithms*, Transactions of the Institute of Measurement and Control, Vol. 22,2, pp 141-178, 2000.